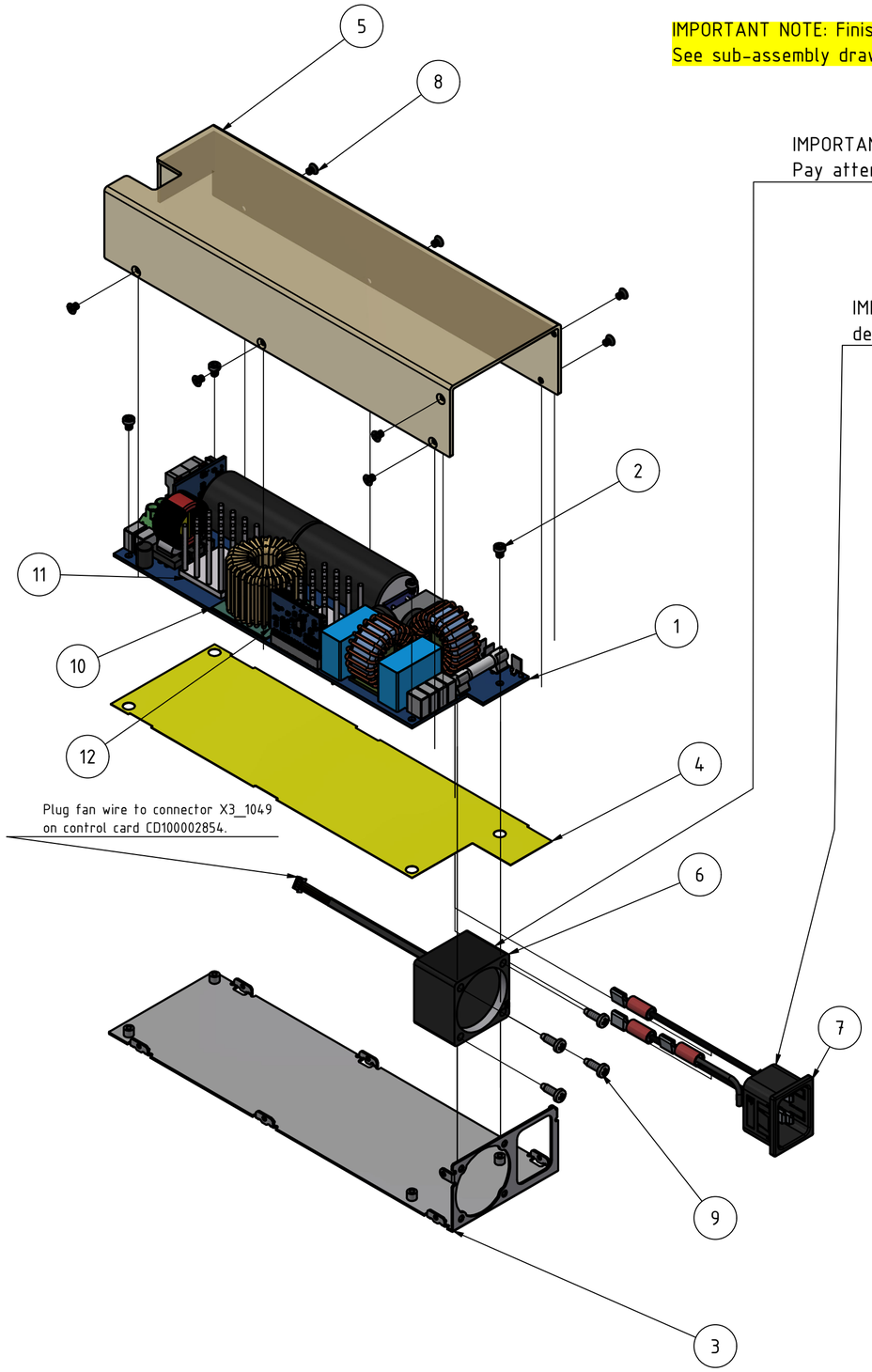

IMPORTANT NOTE: Finish all sub-assemblies first, before assembling the whole board!
See sub-assembly drawings!

IMPORTANT NOTE: The fan is vacuuming air out of the case assembly.
Pay attention to the arrows indicating the direction of the airflow.

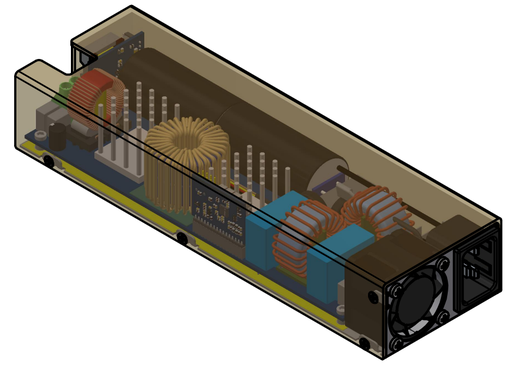

IMPORTANT: Pay extra attention to the jumper wire assembly and the direction of cennections, described in the sub-assembly.

BILL OF COMPONENTS

OBJECT	QUANTITY	DESCRIPTION	SUPPLIER	REFERENCE NO.
1	1	PCB BOARD ASSEMBLY		
2	4	M3x4 screw, cylinder head	Generic	
3	1	HO100002851 metal chassis		
4	1	IS100002850 Isolation foil		
5	1	CT100002850 Acrylic glass cover		
6	1	Fan assembly, see sub assembly drawing FA100002854		
7	1	IEC AC Connector assembly, see sub-assembly drawing IN100002854		
8	8	M3 x 4 screw, countersunk head	Generic	
9	4	AS B194 - Nr. 6 x 7/16-PR2 B	RS-Components	4828076
10	1	L3 choke assembly, see sub-assembly drawing IS200002850		
11	2	Heatsink assembly, see sub-assembly drawing HT100002854		
12	1	Control Card CD100002854		

Status	Änderungen	Datum	Name

	Datum	Name
Gezeichnet	11.03.2021	Wernegger
Kontrolliert		
Norm		

General assembly instructions

P100002991 mechanical assembly

1

A2